Grandlite®

Item No.: ***FL241***

Applications

For walkways, driveways, tennis courts, malls, shopping centers, commercial and industrial complexes, residential areas, and parkway lighting.

Specification Features

- UL and CUL listed for wet location
- Heavy duty die-cast aluminum housing
- Heat and impact resistant tempered glass lens
- Standard with mogul base socket-E39, 4KV, UL approved
- Polyester powder paint finish standard for architectural metallic bronze finish
- A silicone gasket for weather seal
- Ideal for HPS and MH 400 Watts Max

Engineering Dimensions

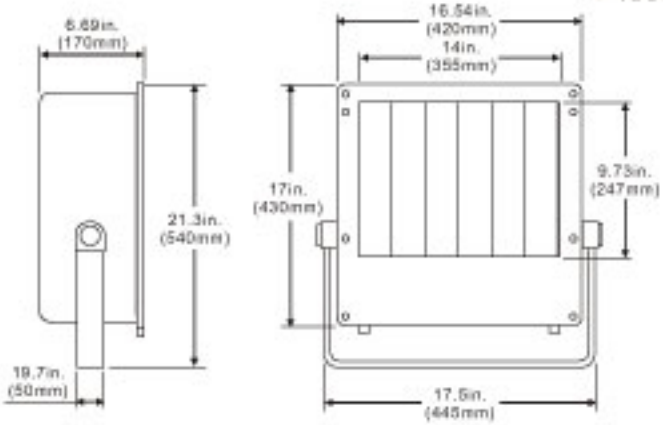

Line Drawing

Assembly Parts

Vandal Shield | Wire Guard | Visor

Packing Information

Weights	Cubit Feet	Master Carton Qty	40'Container Qty
21.5LBS	2.416'	1 PC	800 PCS