Grandlite®

Item No.: *FL214*

Applications

Ideal for building, back yards, parks, signs, sports field, and other general applications where floodlighting may come into use.

Specification Features

- UL and CUL listed for wet locations
- Heavy duty die-cast aluminum powder coating, construction corrosion resistant hardware
- Silicone rubber included to prevent any leakage from the outside
- Heat and impact resistant tempered glass
- Come with anodized aluminum reflector
- Lampholder E-26, UL approved
- Ideal for HPS150 Watts and MH100 Watts Max

Engineering Dimensions

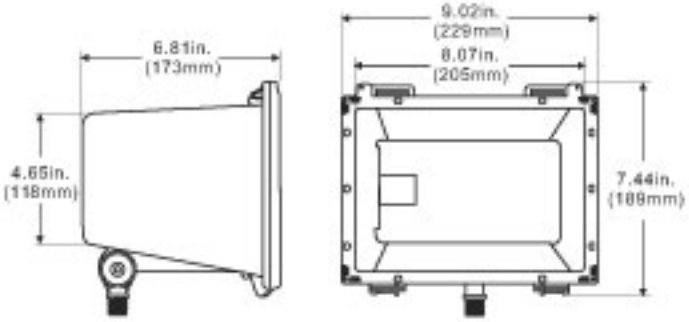

Line Drawing

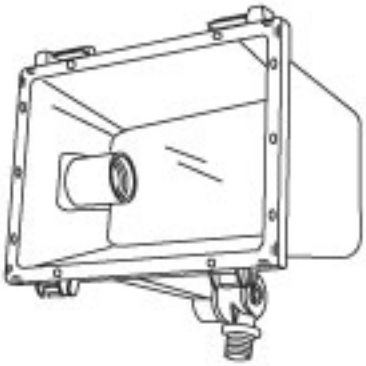

Optional Mounting Plate

Packing Information

Weights	Cubit Feet	Master Carton Qty	40'Container Qty
30.11LBS	2.612'	6 PCS	4500 PCS